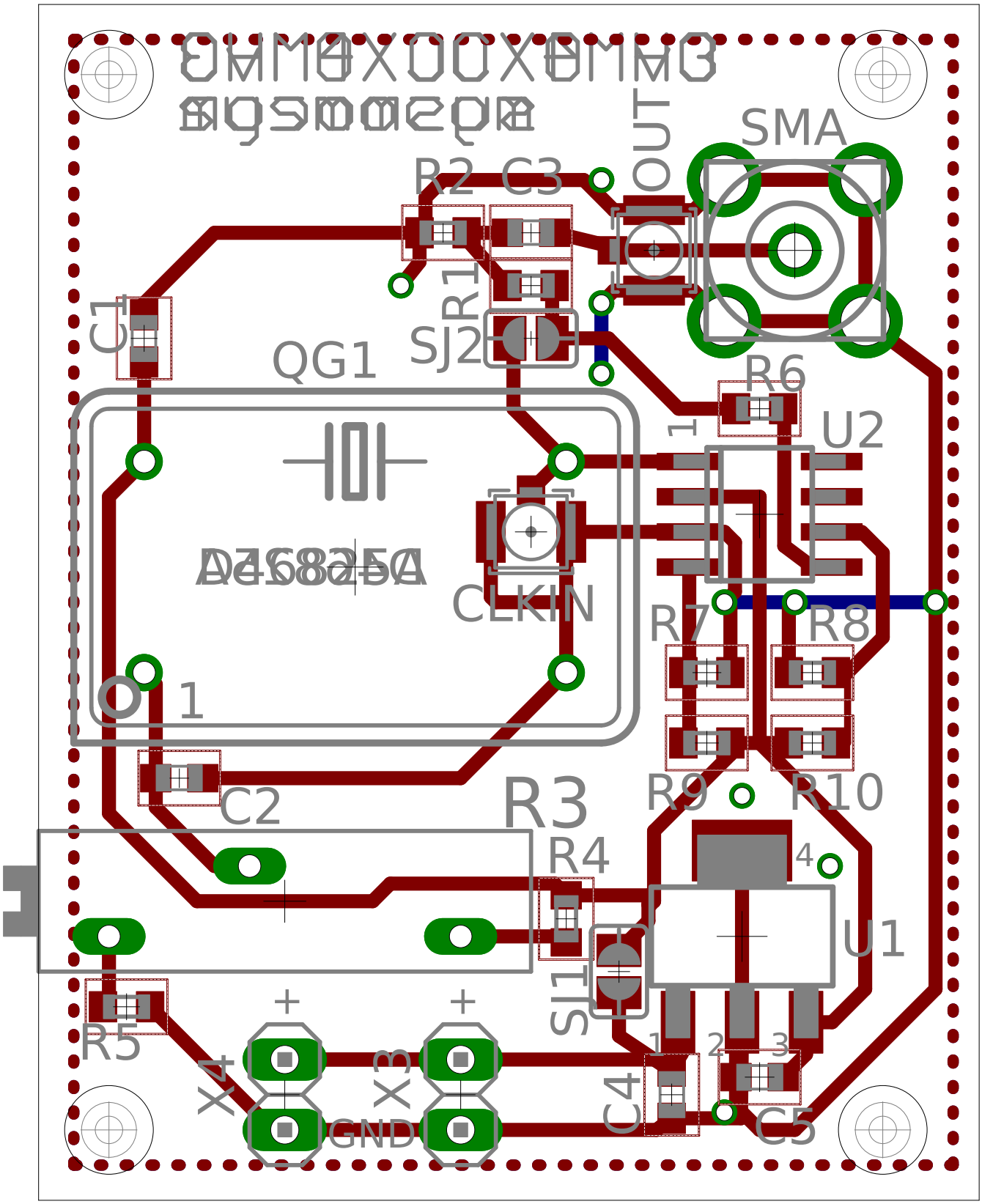

15 Jul 2012 10:17:21 f=5.00 /home/eagle/eagle/ohm4_ocxo/ohm4_ocxo.brd