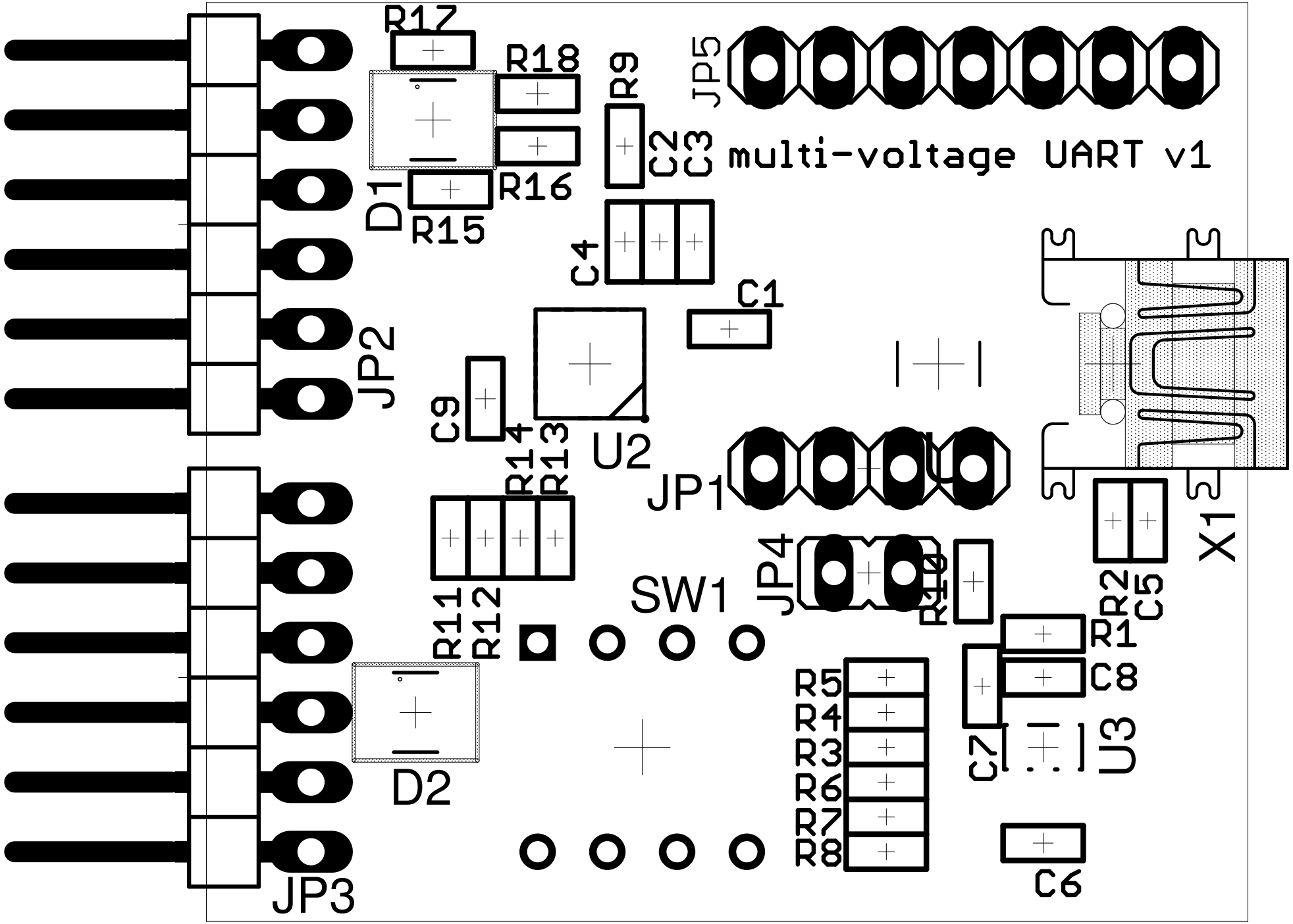

28.10.16 15:57 f=5.52 /space/home_laforge/projects/git/osmo-small-hardware/multivoltage-uart/mv-uart.brd